HG Semiconductors

HG RF POWER TRANSISTOR

TP2314

ROHS Compliance,Silicon NPN POWER TRANSISTOR

DESCRIPTION

Designed for RF power amplifier for Large Signal Power Amplifier Applications, With Emitter Grounded to Case.

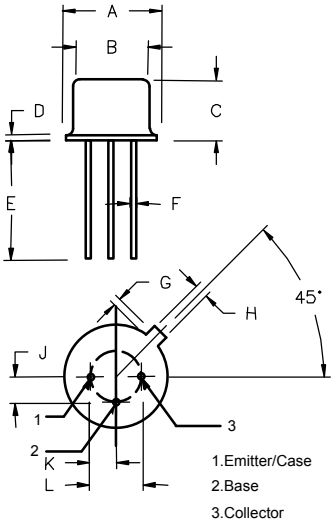

FEATURES

- Specified 12.5V, 175MHz Characteristics
- PO = 4W
- GP = 12 dB min. at 4 W/175 MHz
- Emitter ballasted construction

DIMENSIONS

UNIT	A	B	C	D	E	F	G	H	J	K	L
mm	9.40	8.51	6.60	1.14	12.70	0.48	1.02	0.86	2.67	2.67	5.33
	8.89	8.00	6.10	0.38		0.41	0.74	0.71	2.41	2.41	4.83
inches	0.370	0.335	0.260	0.045	0.500	0.019	0.040	0.034	0.105	0.105	0.210
	0.350	0.315	0.240	0.015		0.016	0.029	0.028	0.095	0.095	0.190

MAXIMUM RATINGS

CHARACTERISTICS	SYMBOL	RATINGS	UNITS
Collector-Base Voltage	V_{CBO}	50	V
Collector-Emitter Voltage	V_{CES}	20	V
Collector-Emitter Voltage	V_{CEO}	20	V
Collector Current	I_C	1	A
Emitter-Base Voltage	V_{EBO}	4	V
Collector Power Dissipation	P_{DISS}	8	W
Junction Temperature	T_J	-65 to 175	°C
Storage Temperature Range	T_{STG}	-65 to 175	°C

ELECTRICAL CHARACTERISTICS

CHARACTERISTICS	SYMBOL	TEST CONDITIONS	MIN.	TYP.	MAX.	UNITS
Collector-Emitter Breakdown Voltage	$V_{(BR)CEO}$	I_C=10mA,I_B=0	20	-	-	V
Collector-Emitter Breakdown Voltage	$V_{(BR)CES}$	I_C=1mA,V_{EB}=0	50	-	-	V
Emitter-Base Breakdown Voltage	$V_{(BR)EBO}$	I_E=1mA,I_C=0	4	-	-	V
Collector Cutoff Current	I_{CBO}	V_{CB} = 30V, I_E = 0	-	-	200	uA
DC Current Gain	h_{FE}	V_{CE}=12V,I_C=100mA	10	-	-	
Power Gain	G_P	V_{CC}=12.5V,P_{OUT}=4W,	12.0	-	-	dB
Collector Efficiency	η_C	f=175MHz	50	-	-	%

Note : Above parameters , ratings , limits and conditions are subject to change.